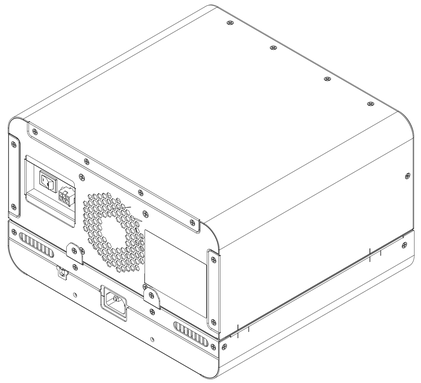

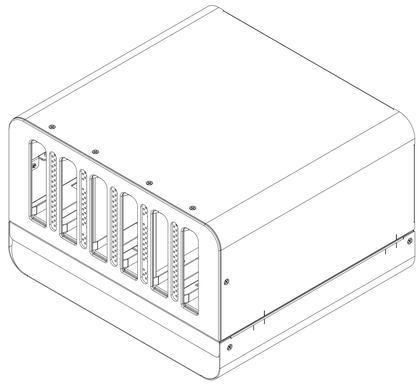

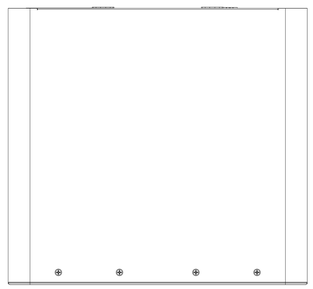

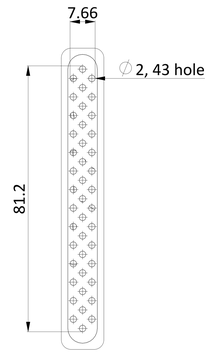

DETAIL B
SCALE 3 : 1

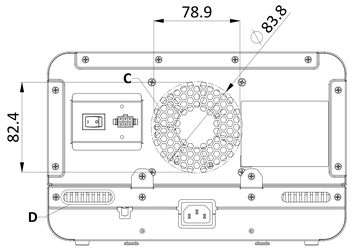

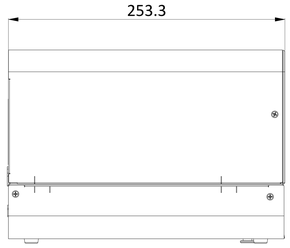

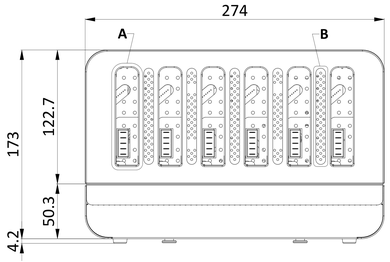

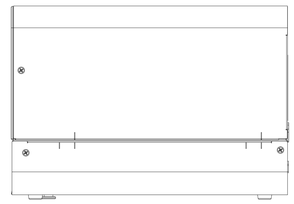

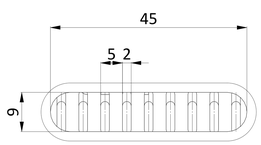

DETAIL D
SCALE 4 : 1

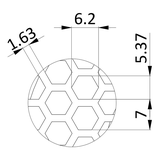

DETAIL C
SCALE 4 : 1

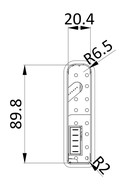

DETAIL A

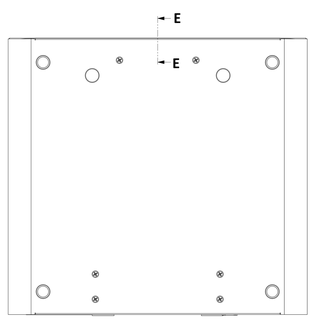

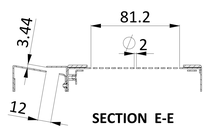

SECTION E-E

REV	DESCRIPTION	SIGN	DATE
5			
4			
3			
2			
1			

The component should be comply with the prohibit of hazardous substances in the RoHs Directive.

RANGE (mm)	Common Tolerance
0~25	±0.10
25~80	±0.15
80~200	±0.20
200~400	±0.30
400~	±0.40
ANGLE	±1°

APPROVE		
CHECK		
DESIGN		
DRAWN	Jesse Chen	2019.05.28
UNIT:mm	SCALE: 1:1	
	~~SIZE: A0~~	
FILE NO:		

iEi Integration Corp.

TITLE: **Dimension**

MODEL: **POCm-DOCKING-6BAY (X556)**

PART NO:

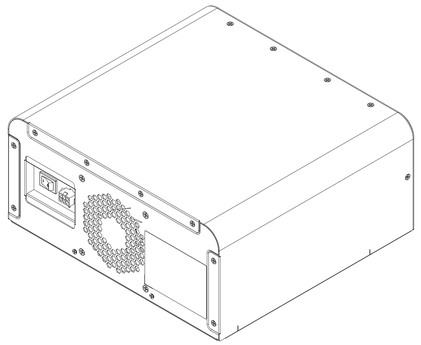

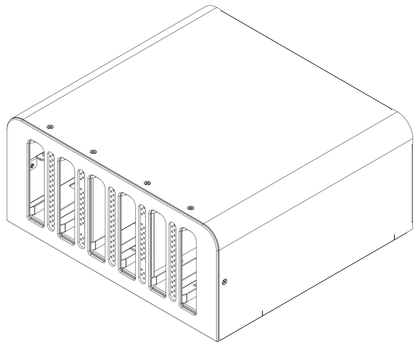

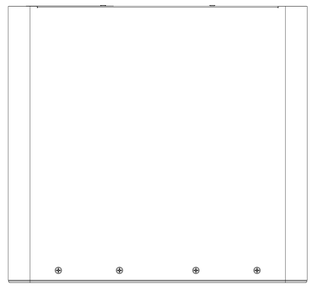

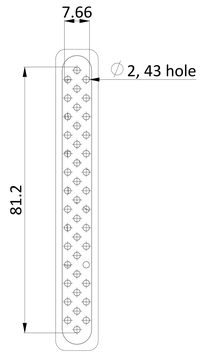

DETAIL B
SCALE 3 : 1

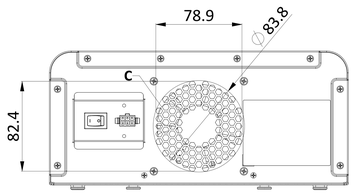

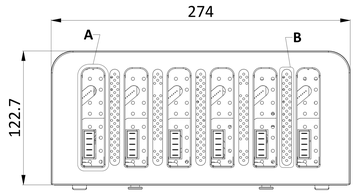

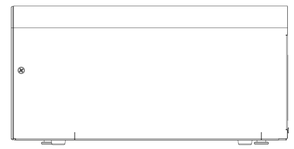

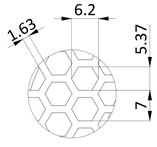

DETAIL C
SCALE 4 : 1

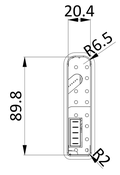

DETAIL A

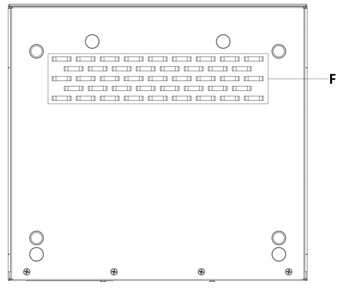

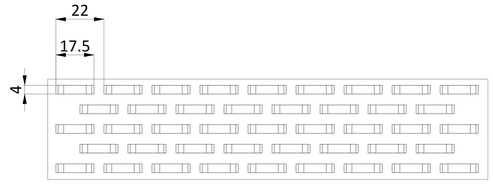

DETAIL F
SCALE 2 : 1

REV	DESCRIPTION	SIGN	DATE
5			
4			
3			
2			
1			

The component should be comply with the prohibit of hazardous substances in the RoHs Directive.

RANGE (mm)	Common Tolerance
0~25	±0.10
25~80	±0.15
80~200	±0.20
200~400	±0.30
400~	±0.40
ANGLE	±1°

APPROVE		
CHECK		
DESIGN		
DRAWN	Jesse Chen	2019.05.28
UNIT:mm	SCALE: 1:1	
	~~SIZE: A0~~	
FILE NO:		

iEi Integration Corp.

TITLE: **Dimension**

MODEL: **POCm-DOCKING-6BAY (X556)**

PART NO: